ROTAMP 62.05L	VERTICAL TAMPER
	QUICK GUIDE INSTRUCTIONS

This quick guide instructions does not release you from reading and complying with the complete operation and maintenance manual!

1 PRE-OPERATION CHECK

For detailed specifications see the operation and maintenance manual (see references with chapter numbers in following text)!

Visual inspection of all parts (chap. 5.2) before starting the machine

1. Check rubber buffers (1; 2) if showing obvious fatique or cracks.

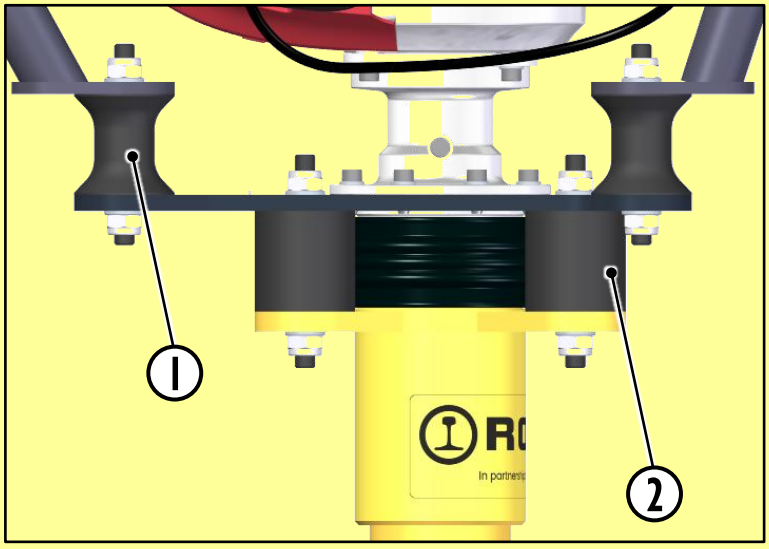

2. Check engine housing (1) for cracks or other damages or oil leackages
   Check engine oil level (2) before start

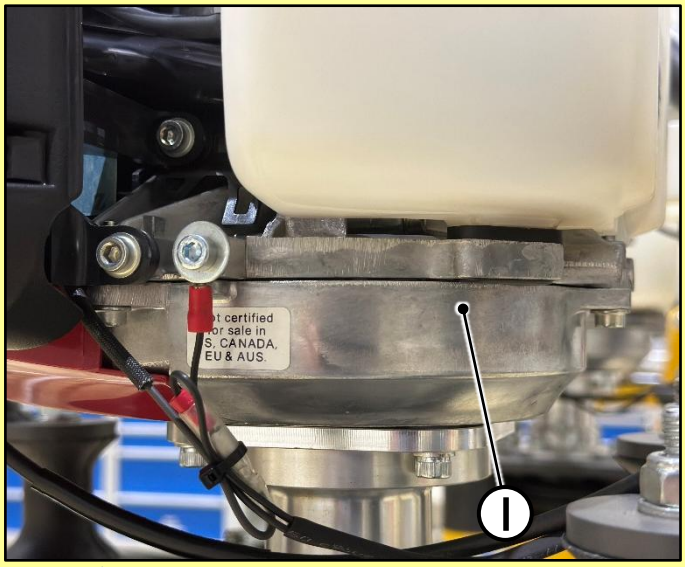

Risk of damage the engine! Do not start the engine if you see oil leackages
Check oil level (2) before start and if required change or refill engine oil.

ROBEL In partnership with Plasser India

3. Check distance to tamping tool and tighten fasting screws

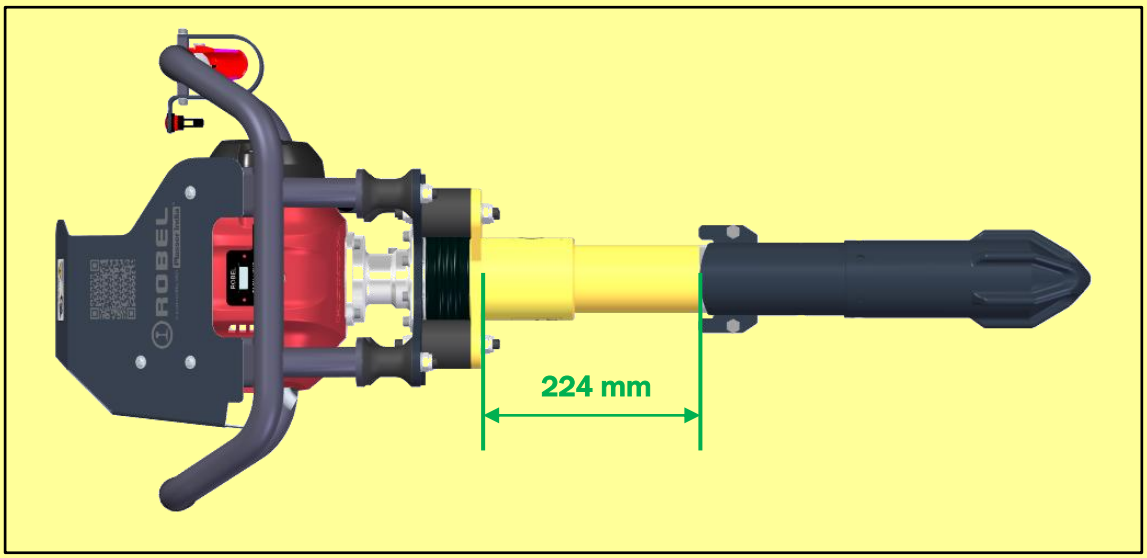

Measuring distance from tamping pick base plate to tamping tool required 224 mm
Tighten fastening screws with torque wrench at 20 Nm

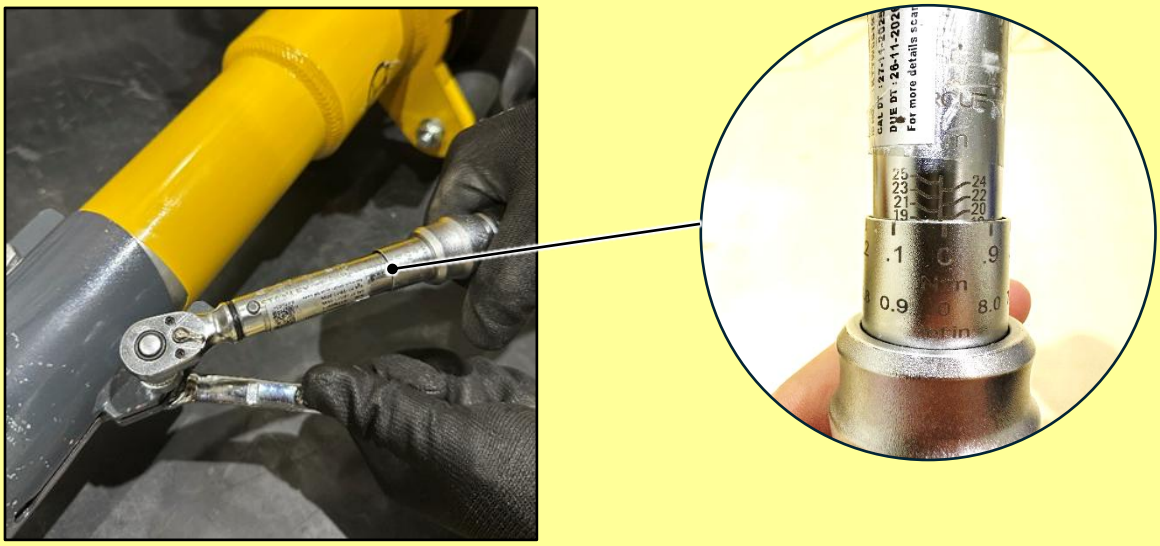

4. Check tamping tool wear shall not less than 36 cm (see chap. 9.6.1).

Risk of causing damage of tamping pick!
If measurement is **36 cm or less** the tamping tool need to change!

5. Check air filter (see chap 5.3.2).

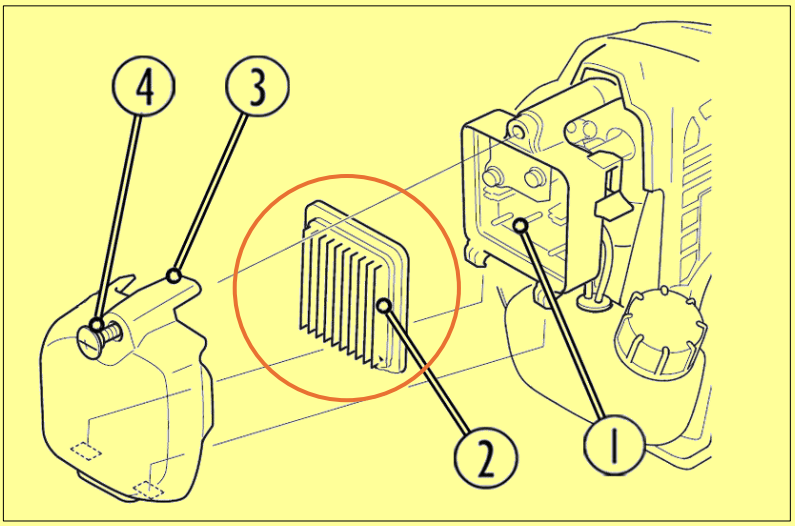

1 Air filter housing
2 Air filter insert
3 Air filter cover
4 Screw

Air Filter okay

Air Filter not okay

Check the air filter insert (2) to ensure it is clean and in good condition.
If necessary, clean or replace the air filter insert (2) see chap. 9.3.2

6. Check petrol (see chap 5.3.3).

XP95
95 OCTANE PREMIUM PETROL

Check fuel level in the tank (chap. 5.3.3) before start the engine.
Only use RON 95 Octane petrol or higher grade – avoid to use E20 petrol!

Petrol with lower grade than RON 95 Octance clog the fuel filter and carburettor.
If such issues, clean or replace the fuel filter and carburettor (see chap. 9.3.5)

2 WORKING

For detailed specifications see the operation and maintenance manual (see references with chapter numbers in following text)!

- Starting the engine (chap. 6.1)
- Working with the tamper (chap. 6.3)

Avoid contact with the sleeper! Avoid contact with the sleeper!

► Place the blade approx. 1 to 5 cm next to the sleeper.

► Do not touch the sleeper with the tamping tool while tamping.

Apply force ergonomically!

► While tamping, use the weight of the upper part of your body to apply the vertical force, this will relieve the backbone.

1. Hold the tamper upright and place it next to the sleeper.
2. Press down the throttle handle by hand. The tamping tool starts to vibrate.
3. Continue holding the tamper by the handles and apply force by using the weight of the upper part of the body.
4. Dive vertically into the ballast until the tip of the tamping tool is located approx. 5 to 10 cm below the bottom of the sleeper, see picture.

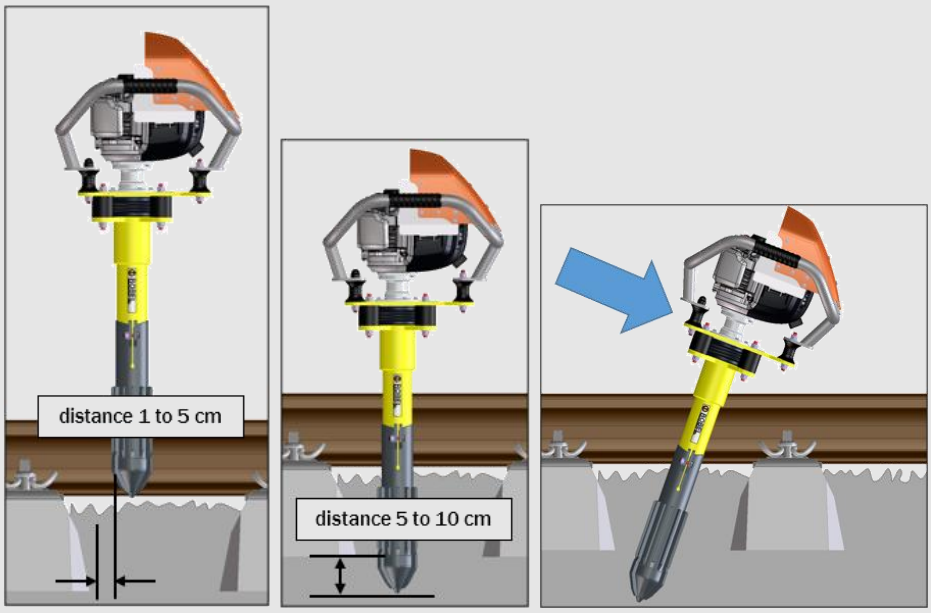

5. Pull the tamper towards the operator so that the ballast is compacted under the sleeper
6. Withdraw the tamper.
7. Repeat steps 1-6 two or three times in order to achieve an optimal and sustainable result.
8. At the end insert the tamper without working it and level the indent at the tamping spot.
9. Repeat the process on both sides of the sleeper.

For optimum tamping result all sleepers must be tamped from both sides (directions).

Use two Vertical Tampers cross vice for optimum tamping result (see chap. 6.3.2).